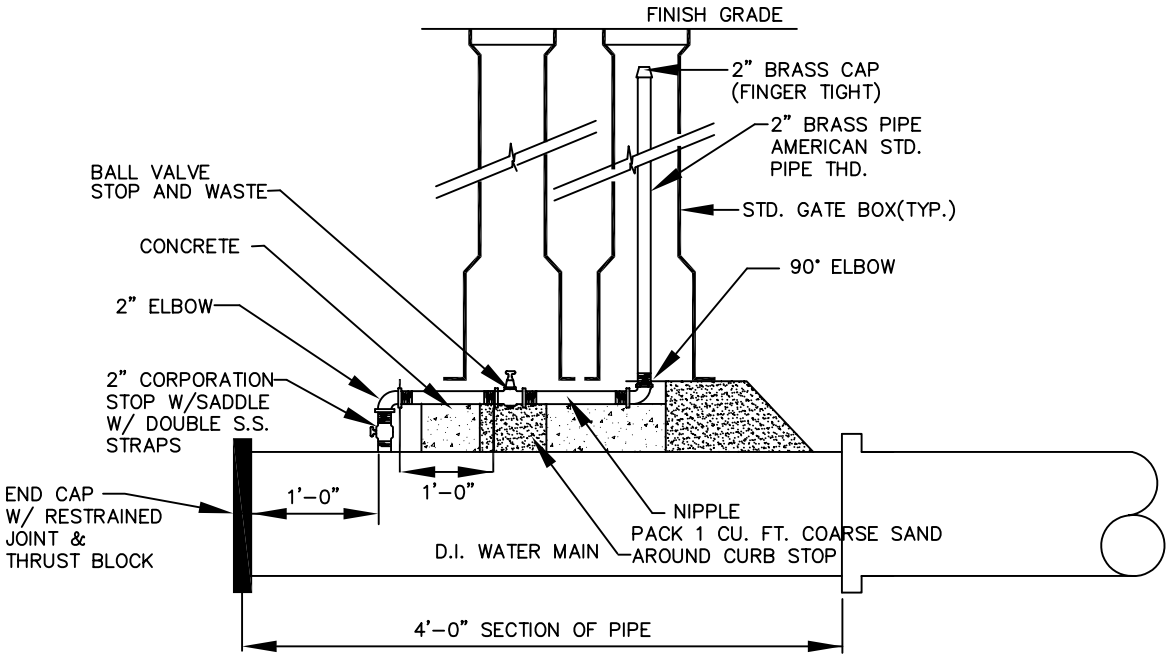

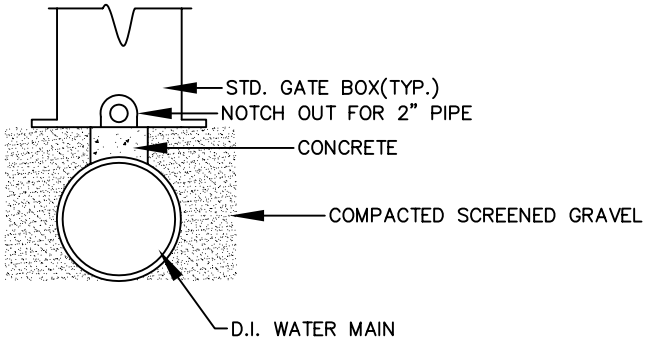

KCWA
"proudly serving"

KENT COUNTY WATER AUTHORITY

PERMANENT BLOWOFF ASSEMBLY

NOT TO SCALE

DATE: 09/2006

PBLOWOFF.DWG